ECEN/CSEN 123 Lab 5 Report

Tuesday 2:15 - 5:00

Austin Petersen, Dylan Thornburg, Madeline Follosco

I. Objectives

- Measure color using a color sensor
- Experiment with the I2C interface
- Build a high-speed color sensor
- Map color coordinates into a color space to distinguish colors

II. Lab Procedure

Experiment 1: TCS3472

1. Find your TCS3472 RGB sensor.

2. Connect the following pins from the sensor to the Arduino (with the power off).

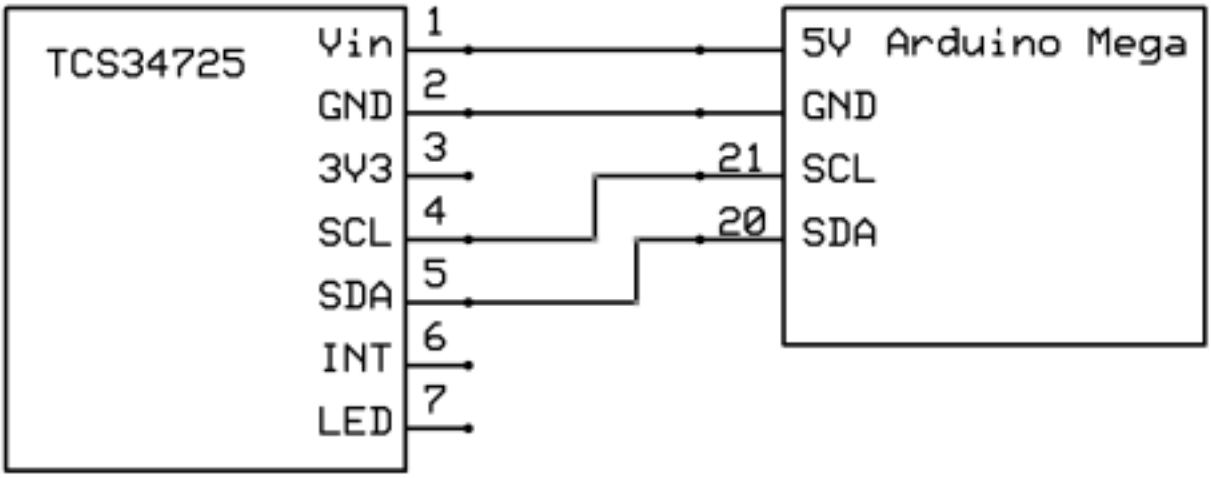

3. **Do not connect the 3V3 pin on the sensor!**

4. Copy the TCS3472 code library (Adafruit_TCS34725-1.4.2.zip) from the Google Drive.

5. In the Arduino IDE, go to Sketch\Include Library\Add .ZIP Library and select the Adafruit_TCS34725-1.4.2.zip file to install. (You may be able to install directly with the library manager as well)

6. Go to File\Examples\Adafruit TCS34725\ and open the demo program tcs34725. **Save the demo program under a new name**.

7. Run that program on your Arduino and make sure you are seeing data on the serial monitor.

8. Mount the sensor so that it is facing downwards 2-10cm. from the table. Place a piece of white paper under the sensor. If the sensor is not physically stable, your readings will be all over the place.

9. Take 10 consistent readings from the white paper. Record all of the data. (You can cut and paste from the Serial Monitor. You can stop scrolling to keep the data on the Serial Monitor screen.) Using the data from the Clear channel – determine the average reading value and also

the noise level as a percentage of the average reading value. Include the data and calculations in your report. Also calculate the average readings from the R, G, and B channels. Demo 1 – show that this is working.

Measuring roughly 5cm from the table, these were our readings:

```
Color Temp: 3057 K - Lux: 232 - R: 567 G: 379 B: 248 C: 1263

Color Temp: 3058 K - Lux: 232 - R: 569 G: 380 B: 249 C: 1266

Color Temp: 3058 K - Lux: 232 - R: 569 G: 380 B: 249 C: 1266

Color Temp: 3054 K - Lux: 233 - R: 568 G: 380 B: 248 C: 1265

Color Temp: 3058 K - Lux: 232 - R: 569 G: 380 B: 249 C: 1268

Color Temp: 3055 K - Lux: 232 - R: 570 G: 380 B: 249 C: 1268

Color Temp: 3055 K - Lux: 234 - R: 570 G: 381 B: 249 C: 1268

Color Temp: 3055 K - Lux: 234 - R: 570 G: 381 B: 249 C: 1268

Color Temp: 3058 K - Lux: 232 - R: 569 G: 380 B: 249 C: 1268

Color Temp: 3058 K - Lux: 232 - R: 569 G: 380 B: 249 C: 1267
```

Avg reading: C =1266.7, R = 269, G =380.1, B = 248.8

10. Replace the white paper with black. Take 10 consistent readings from the black paper. Calculate the average readings from the C, R, G, and B channels.

Putting the black paper right against the sensor:

```
Color Temp: 3247 K - Lux: 16 - R: 39 G: 27 B: 19 C: 88

Color Temp: 3296 K - Lux: 16 - R: 40 G: 28 B: 20 C: 90

Color Temp: 3296 K - Lux: 16 - R: 40 G: 28 B: 20 C: 90

Color Temp: 3296 K - Lux: 16 - R: 40 G: 28 B: 20 C: 90

Color Temp: 3296 K - Lux: 16 - R: 40 G: 28 B: 20 C: 90

Color Temp: 3296 K - Lux: 16 - R: 40 G: 28 B: 20 C: 90

Color Temp: 3296 K - Lux: 16 - R: 40 G: 28 B: 20 C: 90

Color Temp: 3296 K - Lux: 16 - R: 40 G: 28 B: 20 C: 90

Color Temp: 3249 K - Lux: 16 - R: 41 G: 28 B: 20 C: 91

Color Temp: 3249 K - Lux: 16 - R: 41 G: 28 B: 20 C: 91
```

Avg reading: C =90, R = 40.1, G =27.9, B = 19.9

11. Test Red, Green, and Blue paper from Test Sample Set A and record important lab observations that may help in future use of this sensor.

Observations:

- **Completely covering the paper measures proper readings of each color**
- **Having the paper too far away from the sensor absorbs too much external white light**

12. Modify the program to calculate and report the amount of time it takes to perform one iteration of loop(); If you have added anything to loop() other than timing measurement, comment it out first.

13. **Save the demo program under a new name**. Modify the demo program to set the measurement time to 24ms and the measurement gain to 16X. (Hint: Find the source code for Adafruit_TCS34725.h on your computer.) Record any observations as to how this changes the behavior and accuracy of the sensor.

Before Program Modifications:

```
Color Temp: 3478 K - Lux: 298 - R: 500 G: 419 B: 274 C: 1310

It takes this many microseconds to complete one loop: 618708

Color Temp: 3483 K - Lux: 297 - R: 499 G: 418 B: 274 C: 1309

It takes this many microseconds to complete one loop: 618704

Color Temp: 3483 K - Lux: 297 - R: 499 G: 418 B: 274 C: 1308

It takes this many microseconds to complete one loop: 618696

Color Temp: 3483 K - Lux: 297 - R: 499 G: 418 B: 274 C: 1309

It takes this many microseconds to complete one loop: 618708

Color Temp: 3483 K - Lux: 297 - R: 499 G: 418 B: 274 C: 1308

It takes this many microseconds to complete one loop: 618700

Color Temp: 3483 K - Lux: 297 - R: 499 G: 418 B: 274 C: 1308

It takes this many microseconds to complete one loop: 618708
```

After Program Modifications:

```
It takes this many microseconds to complete one loop: 64476

Color Temp: 3417 K - Lux: 163 - R: 282 G: 231 B: 150 C: 730
```

```
It takes this many microseconds to complete one loop: 64476

Color Temp: 3417 K - Lux: 163 - R: 282 G: 231 B: 150 C: 730

It takes this many microseconds to complete one loop: 64476

Color Temp: 3431 K - Lux: 162 - R: 282 G: 231 B: 151 C: 731

It takes this many microseconds to complete one loop: 64476

Color Temp: 3431 K - Lux: 162 - R: 282 G: 231 B: 151 C: 731

It takes this many microseconds to complete one loop: 64476

Color Temp: 3431 K - Lux: 164 - R: 282 G: 232 B: 151 C: 732

It takes this many microseconds to complete one loop: 64476

Color Temp: 3431 K - Lux: 164 - R: 282 G: 232 B: 151 C: 732
```

The sample size is much smaller (integration time), but because of the larger gain, that helps to offset expected values. They overall still measure smaller though.

CODE

```
#include <Wire.h>
#include "Adafruit_TCS34725.h"

/* Example code for the Adafruit TCS34725 breakout library */

/* Connect SCL    to analog 5
   Connect SDA    to analog 4
   Connect VDD    to 3.3V DC
   Connect GROUND to common ground */

/* Initialise with default values (int time = 2.4ms, gain = 1x) */
// Adafruit_TCS34725 tcs = Adafruit_TCS34725();

/* Initialise with specific int time and gain values */
Adafruit_TCS34725 tcs =
Adafruit_TCS34725(TCS34725_INTEGRATIONTIME_24MS, TCS34725_GAIN_16X);

void setup(void) {
  Serial.begin(9600);
```

```
  if (tcs.begin()) {
    Serial.println("Found sensor");
  } else {
    Serial.println("No TCS34725 found ... check your connections");
    while (1);
  }

  // Now we're ready to get readings!
}

void loop(void) {
  unsigned long start = micros();
  uint16_t r, g, b, c, colorTemp, lux;

  tcs.getRawData(&r, &g, &b, &c);
  // colorTemp = tcs.calculateColorTemperature(r, g, b);
  colorTemp = tcs.calculateColorTemperature_dn40(r, g, b, c);
  lux = tcs.calculateLux(r, g, b);

  Serial.print("Color Temp: "); Serial.print(colorTemp, DEC);
Serial.print(" K - ");
  Serial.print("Lux: "); Serial.print(lux, DEC); Serial.print(" - ");
  Serial.print("R: "); Serial.print(r, DEC); Serial.print(" ");
  Serial.print("G: "); Serial.print(g, DEC); Serial.print(" ");
  Serial.print("B: "); Serial.print(b, DEC); Serial.print(" ");
  Serial.print("C: "); Serial.print(c, DEC); Serial.println(" ");
  Serial.print("It takes this many microseconds to complete one loop:
" + String(micros()-start));
  Serial.println(" ");
}
```

Experiment 2: Build Your Own RGB Sensor

1. Build the DIY RGB sensor according to the directions in the separate handout. I will supply the LEDs and Phototransistor in the lab. They are different from the ones in your kit. Don't mix them up.

2. Connect the sensor using your proto-board and Arduino as shown below. Look at the resistor values carefully.

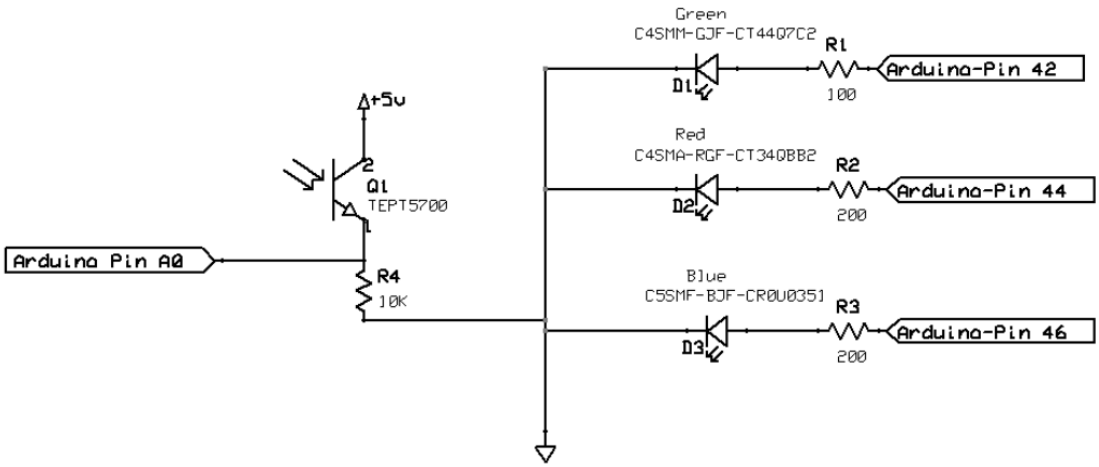

3. Load up the sketch "LED-response" from the lab Google folder. This sketch turns on the blue LED, waits a specific number of µs, then samples the phototransistor. It then turns off the LED for 100 ms. Depending on the delay, the results differ. It seems to take some time for the LED to reach full power and/or the phototransistor to reach full current output. Record the data and determine how long you should delay in order to get 90% of the maximum response and how long in order to get 99% of maximum response.

```
ALL ON WHITE PAPER

BLUE LED

Max Response: 410

90% max response: 369 @ 32 ms

99% max response: 406 @ 63 ms
```

4. Modify the program to perform the same test for the Red and Green LEDs. Record the results

and make the same determinations.

```
RED LED

Max Response: 404

90% max response: 364 @ 33 ms

99% max response: 400 @ 65 ms


GREEN LED

Max Response: 436

90% max response: 392 @ 32 ms

99% max response: 432 @ 67 ms
```

5. Write a program that every 100ms: ([1] you can wait a fixed time based on your prior experiments.)

    a. Turns on the Red LED, waits until at least the 90% response time[1]; reads the phototransistor voltage level 4 times and adds the 4 results to produce a value r; turns off the red LED for at least 1ms.

    b. Turns on the Green LED, waits until at least the 90% response time; reads the phototransistor voltage level 4 times and adds the 4 results to produce a value g; turns off the green LED for at least 1ms.

    c. Turns on the Blue LED, waits until at least the 90% response time; reads the phototransistor voltage level 4 times and adds the 4 results to produce a value b; turns off the blue LED for at least 1ms.

    d. Prints the values of r, g, and b to the Serial Monitor with labels.

6. Test and record the values for white paper, black paper, and red, green, and blue paper from Test Sample Set A. Demo 2 – show this program running.

Blue Paper	`r: 770`
	`b: 1132`
	`g: 1130`

Green Paper	`r: 857`

	g: 1368 b: 972
Red Paper	r: 1449 g: 1143 b: 998
White Paper	r: 1648 g: 1768 b: 1695
Black Paper	r: 757 g: 1007 b: 780

CODE

```
#define RED 44
#define BLUE 46
#define GREEN 42
#define TIMEINTERVAL 10
#define PHOTOIN A0


#define RED_90 33
#define GREEN_90 32
#define BLUE_90 32

int i;
int reading[100];

void setup() {
```

```
  Serial.begin(9600);
  pinMode(RED, OUTPUT);
  pinMode(GREEN, OUTPUT);
  pinMode(BLUE, OUTPUT);
  pinMode(PHOTOIN, INPUT);
  analogReference(DEFAULT);
  digitalWrite(RED, LOW);
  digitalWrite(GREEN, LOW);
  digitalWrite(BLUE, LOW);
}

int measureLED(int ledPin, unsigned long waitMillis) {
  // turn off all LEDS before turning the right one on just in case
  digitalWrite(RED, LOW);
  digitalWrite(GREEN, LOW);
  digitalWrite(BLUE, LOW);
  digitalWrite(ledPin, HIGH);
  delay(waitMillis);

  //read phototransistor 4 times and sum
  int sum = 0;
  sum += analogRead(PHOTOIN);
  sum += analogRead(PHOTOIN);
  sum += analogRead(PHOTOIN);
  sum += analogRead(PHOTOIN);

  digitalWrite(ledPin, LOW);
  delay(1);// LED off at least 1ms
  return sum;
}

void loop() {
  unsigned long startMillis = millis();
  int r = measureLED(RED, RED_90);
  int g = measureLED(GREEN, GREEN_90);
  int b = measureLED(BLUE, BLUE_90);
  Serial.print("r: ");
  Serial.println(r);
```

```
  Serial.print("g: ");
  Serial.println(g);
  Serial.print("b: ");
  Serial.println(b);
  while (millis() - startMillis < 100) ;// ensure only repeated when
100ms met
}
```

7. Add a red, green, blue, and white LED to your design (from your kit). Connect each one to an Arduino digital output on one side and through a 330Ω resistor to ground on the other.

8. Create a discrimination function that determines if a paper sheet is:

    a. Red

    b. Green

    c. Blue

    d. Black

    e. White

    And turns on the corresponding LED to indicate which. (No LED for black)

CODE

```
#define RED 44
#define BLUE 46
#define GREEN 42
#define PHOTOIN A0

#define RED_90 33
#define GREEN_90 32
#define BLUE_90 32

//indicator LEDs
#define IRED 30
#define IGREEN 31
#define IBLUE 32
#define IWHITE 33
```

```
//tune these later
#define BLACK_THR 1650
#define WHITE_THR 3000

void setup() {
  Serial.begin(9600);
  pinMode(RED, OUTPUT);
  pinMode(GREEN, OUTPUT);
  pinMode(BLUE, OUTPUT);
  pinMode(PHOTOIN, INPUT);
  analogReference(DEFAULT);
  digitalWrite(RED, LOW);
  digitalWrite(GREEN, LOW);
  digitalWrite(BLUE, LOW);

  pinMode(IRED, OUTPUT);
  pinMode(IGREEN, OUTPUT);
  pinMode(IBLUE, OUTPUT);
  pinMode(IWHITE, OUTPUT);
  digitalWrite(IRED, LOW);
  digitalWrite(IGREEN, LOW);
  digitalWrite(IBLUE, LOW);
  digitalWrite(IWHITE, LOW);
}

int measureLED(int ledPin, unsigned long waitMicros) {
  digitalWrite(RED, LOW);
  digitalWrite(GREEN, LOW);
  digitalWrite(BLUE, LOW);
  digitalWrite(ledPin, HIGH);
  delayMicroseconds(waitMicros);

  int sum = 0;
  sum += analogRead(PHOTOIN);
  sum += analogRead(PHOTOIN);
  sum += analogRead(PHOTOIN);
  sum += analogRead(PHOTOIN);
```

```
  digitalWrite(ledPin, LOW);
  delay(1);
  return sum;
}

void indicatorsOff() {
  digitalWrite(IRED, LOW);
  digitalWrite(IGREEN, LOW);
  digitalWrite(IBLUE, LOW);
  digitalWrite(IWHITE, LOW);
}

//0=black,1=red,2=green,3=blue,4=white
int discriminate(int r, int g, int b) {
  long total = (long)r + (long)g + (long)b;

  if (total < BLACK_THR) return 0;
  if (total > WHITE_THR) return 4;
  if (r >= (g-100) && r >= b) return 1;
  if ((g-200) >= r && (g-100) >= b) return 2;
  if (b >=700 && total <= 2100) return 3;
}

void showColor(int which) {
  indicatorsOff();
  if (which == 1) digitalWrite(IRED, HIGH);
  else if (which == 2) digitalWrite(IGREEN, HIGH);
  else if (which == 3) digitalWrite(IBLUE, HIGH);
  else if (which == 4) digitalWrite(IWHITE, HIGH);
  //no LED for black (which==0)
}

void loop() {
  unsigned long startMillis = millis();

  int r = measureLED(RED, RED_90);
  int g = measureLED(GREEN, GREEN_90);
```

```
  int b = measureLED(BLUE, BLUE_90);

  Serial.print("r: ");
  Serial.println(r);
  Serial.print("g: ");
  Serial.println(g);
  Serial.print("b: ");
  Serial.println(b);
  int which = discriminate(r, g, b);
  showColor(which);
  while (millis() - startMillis < 100) ;
}
```

9. Get samples from Test Sample Set B and test them on your program. They should provide correct answers. Demo 3 – show this program running.

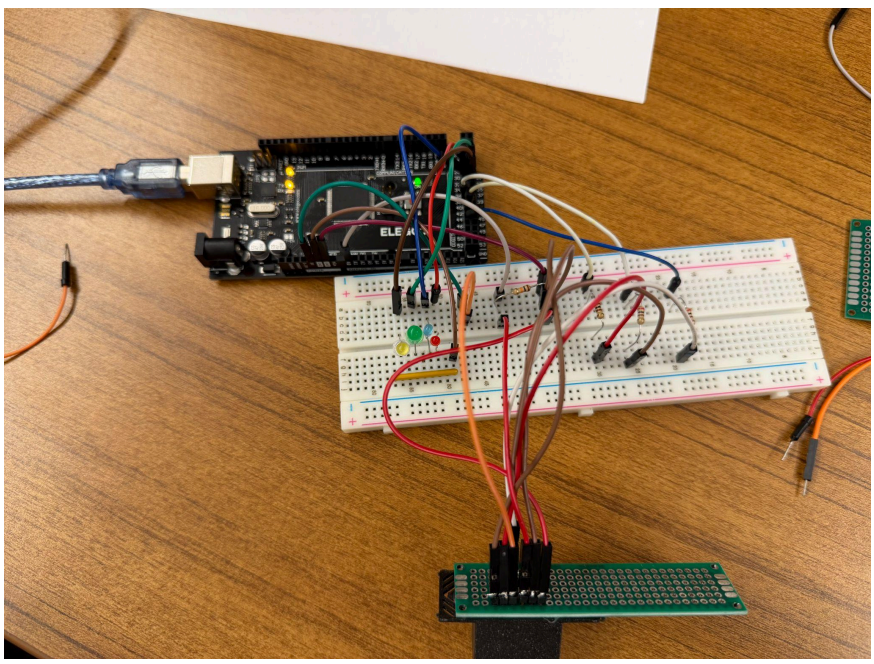

Observations:

- Color thresholds are super sensitive, especially regarding distance of the paper.
- Adjustments to thresholds were done with trial and error.
- Note: Red is emitter (long lead)